SH PLATE LOADED SERIES

SH060 - ISO BENT-OVER ROW

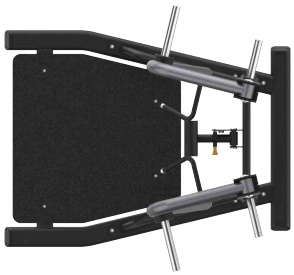

PRODUCT OVERVIEW

The SH060 is a premium plate-loaded training machine designed specifically for back development. Featuring a modern aesthetic and robust structure, it is ideal for large commercial gyms and high-end personal training studios.
The movement arms follow the natural muscle fiber orientation of the back and the shoulder joint's range of motion, ensuring smooth, safe, and precise training while effectively activating the latissimus dorsi, rhomboids, trapezius, and other key back muscles.
Equipped with a multi-grip handle system, the unit supports wide, narrow, pronated, and neutral grips, allowing users to tailor their training path to different goals—whether focused on back width or thickness. A 6-position adjustable support pad adapts to users of varying heights, helping them find the optimal body alignment for comfort and performance.

SPECIFICATIONS & KEY FEATURES

Specifications

Dimension:	1695*1753*1681mm
Net Weigh:	166kg
Max Load Capacity:	300kg[2x150kg]
Main Frame Tubing:	PT60x120x2.5
Standard Color Scheme:	SH Series standard color scheme

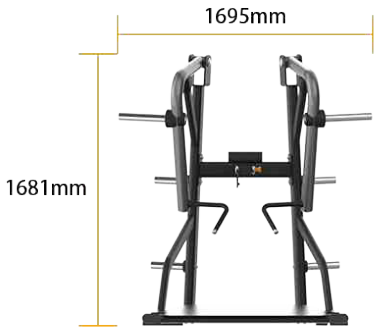

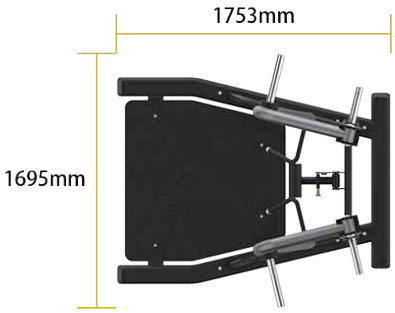

Product Features

Robust Structure, Stable Performance

Constructed with high-strength steel and precision craftsmanship, the unit delivers reliable stability and durability, even under heavy use in high-frequency training environments.

Multi-Grip Handle System

Offers a wide range of grip options—from wide to narrow, and pronated to neutral—fully engaging the lats, rhomboids, and traps for both width expansion and thickness development.

6-Position Adjustable Support Pad

Accommodates users of different heights, enabling ergonomic alignment and proper body positioning for optimized movement and muscle engagement.

Ergonomic Back Pad Support

Provides stable trunk support, minimizing compensatory movement and unnecessary sway, ensuring greater training safety and enhanced motion control.